ADAPTOR 30 mm FOR I52

ART. NO. 320530

GENERAL

KEOFITT has the widest selection of spare parts and accessories to complete your sampling system.

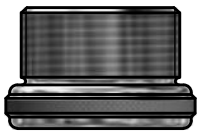

Compatible with all KEOFITT I52 valve bodies /Sesame Ingold valve body.

FEATURES

Connection: 52 mm Ingold

CERTIFICATION*

-

TECHNICAL DATA

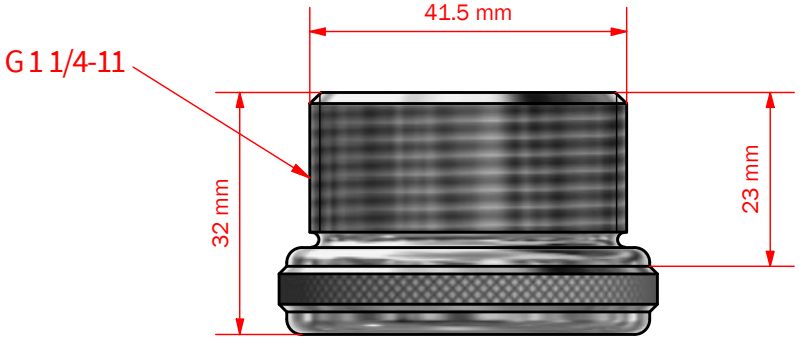

Material (process contact)

-	-

Material (without process contact)

· Steel parts	AISI 316L (1.4404)

Surface Treatment

· Outside	-
· Inside (wetted surface)	Electropolished Ra <= 1.2 µm
· Process connection	-

Pressure & Temperature

· Pressure	-
· Temperature	-
· Air supply	-

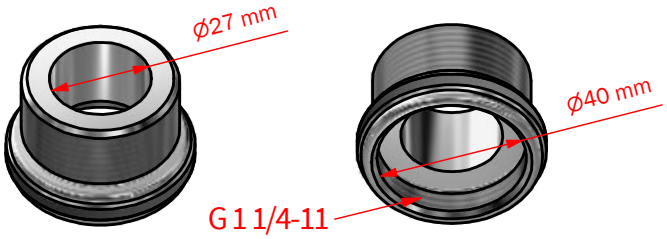

Net Weight

· kg/lbs	0.193 kg/0.426 lbs

Spareparts

-	NOT APPLICABLE

*For further information and download please visit www.keofitt.dk

KEOFITT A/S reserves the right to change technical data without notice! Valid version of the data sheets is available on www.keofitt.dk.